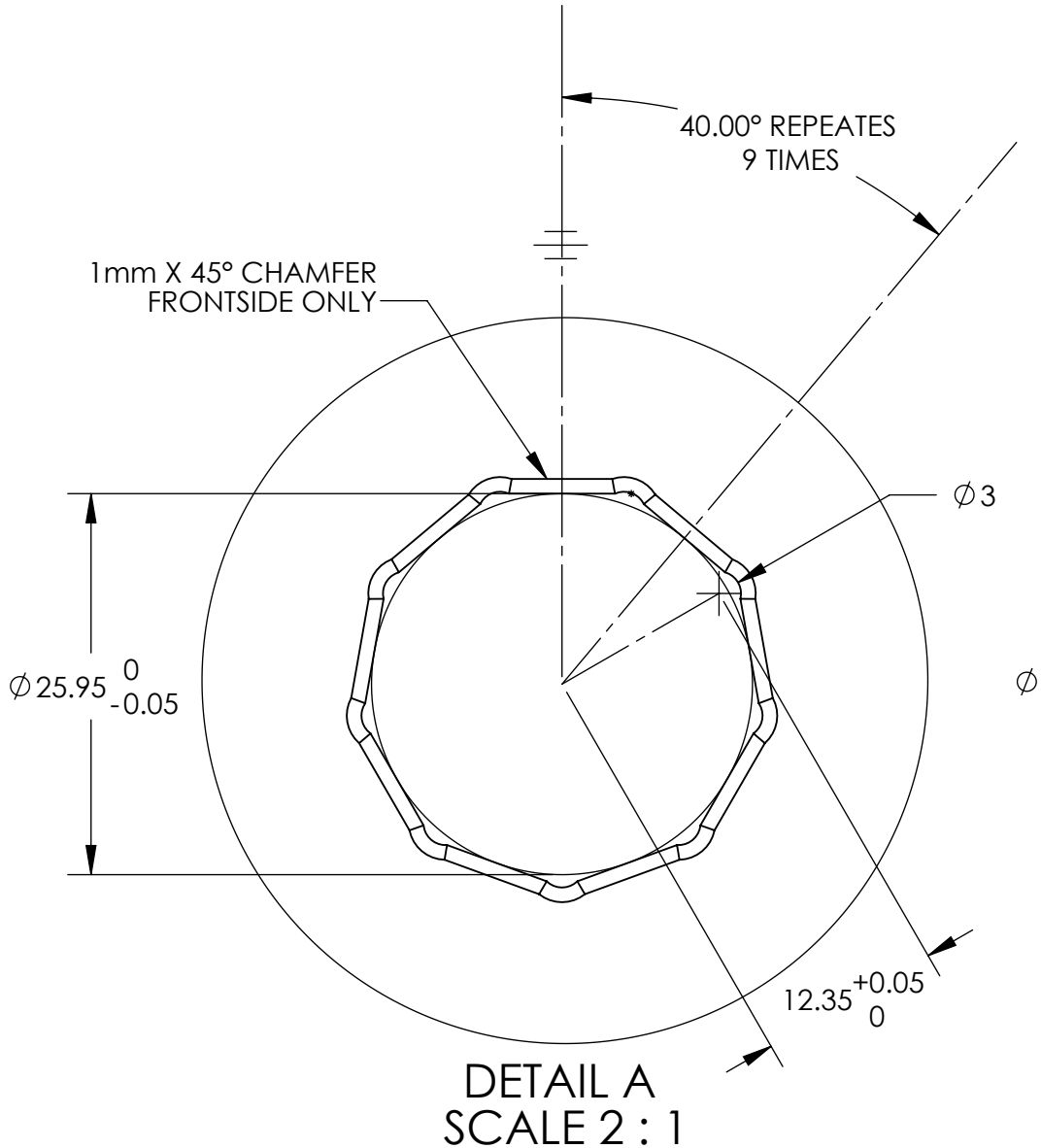

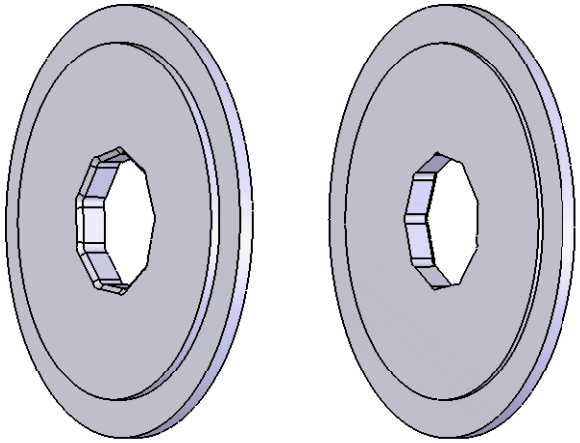

FRONT (W/CHAMFER) REAR (NO CHAMFER)

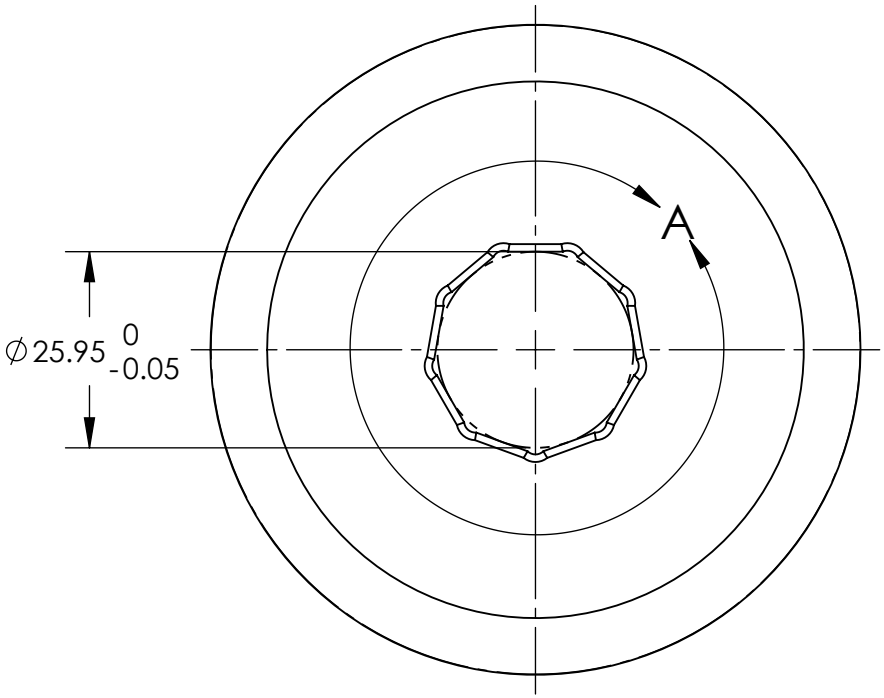

SOCKET DRIVE SPROCKET DIMENSIONS JULY 2009